2004 EL DORADO INVITAIONAL

Weight Class : 103 LBS.

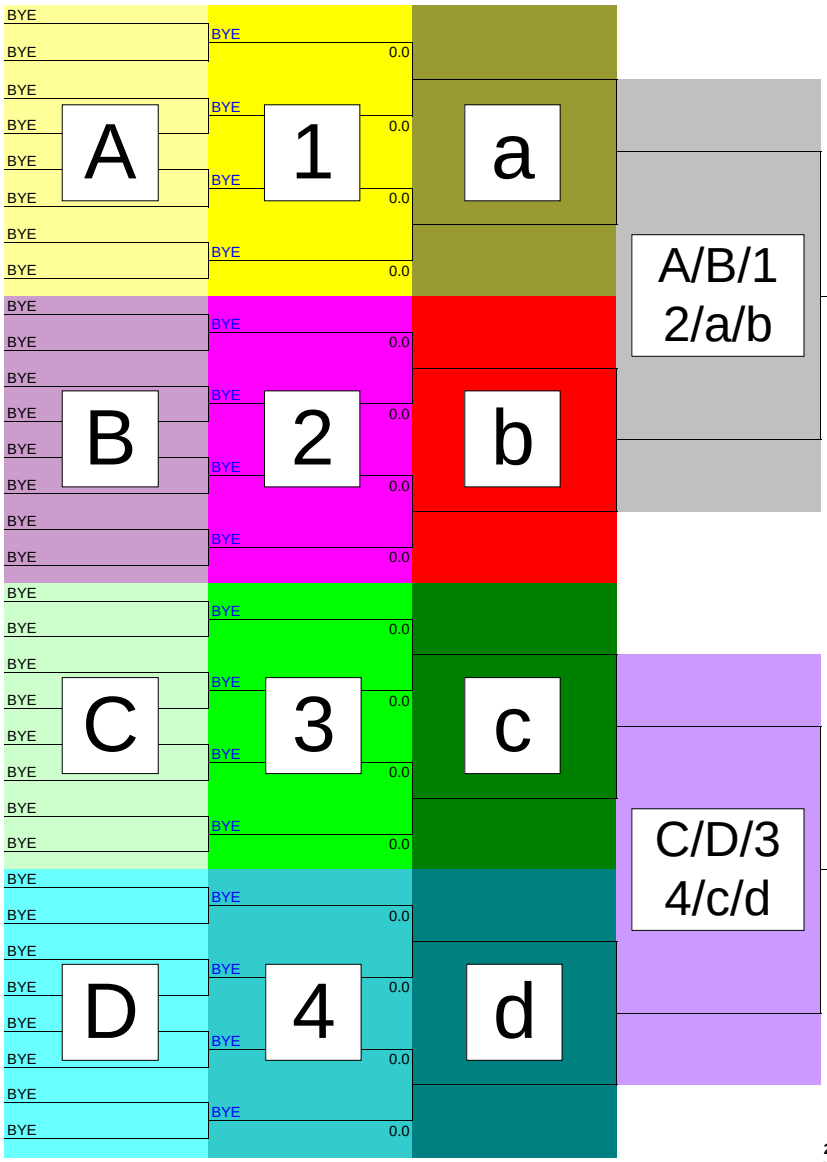

1st

1st
2nd
3rd
4th
5th
6th
7th
8th

2004 EL DORADO INVITAIONAL
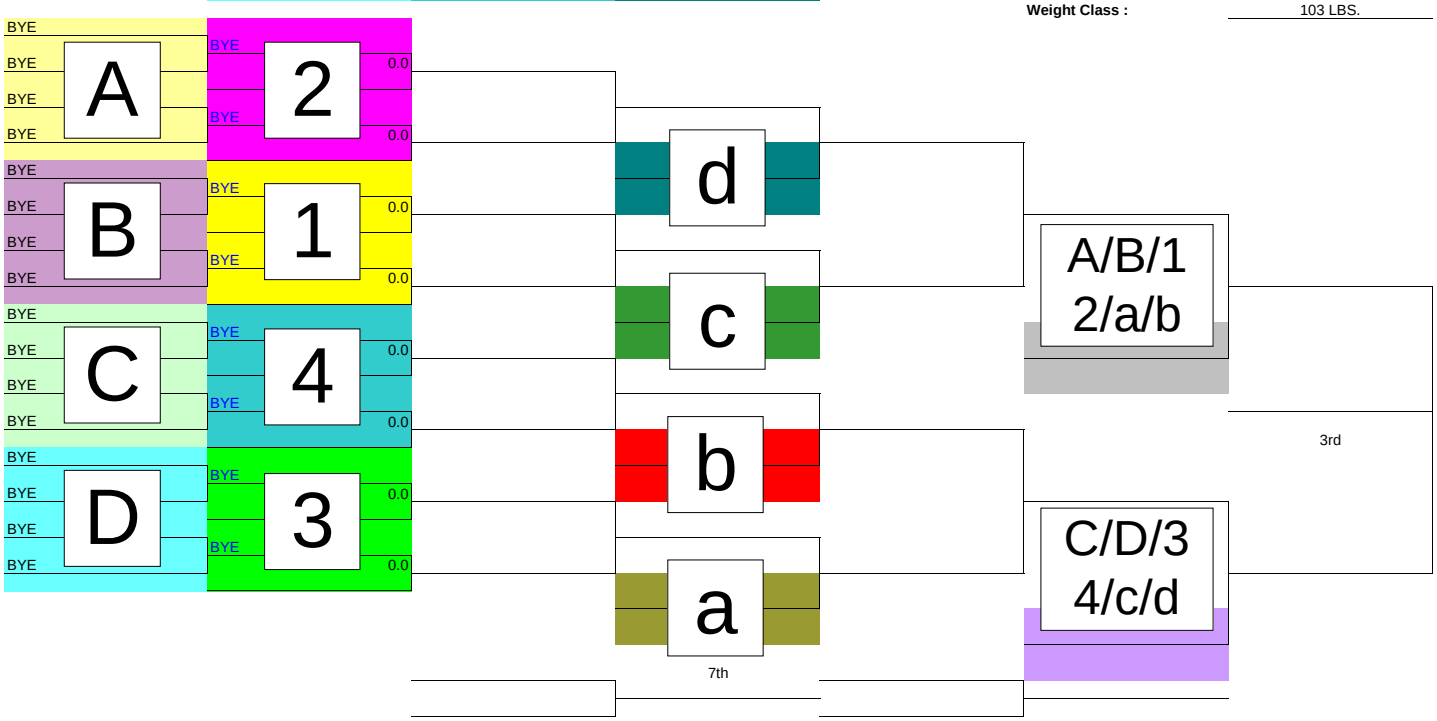
Weight Class : 103 LBS.